Experiences in SLD Projects for Automotive Industry

Designing and Solutionst®

Lauramid® / Lauramid Inject®
two different materials with same basement

- **Lauramid® - Gravity casted material without pressure on monomers.**

  Monomeres are nearly free of orientation and free of stress

- **Lauramid Inject® - 100 % resign material out of scraps during machining process of parts out of Lauramid®. No additional additives and combination with other plastic materials**

  ➔ Similar material characteristics like Lauramid ®

Characteristics of Lauramid®

- Casted material absolutely without pressure on monomers
- High crystalline structure (about 45%)
- Lowest water absorption of all polyamides
- High dimension stability
- High wear resistance
- High chemical resistance
- Good constructions material (temp. Of -40°C up to + 120°C)
- High impact strength up to - 80°C
- Good absorbability
- High elasticity in return (memory effect)
- Very good creep resistance
- Lubrication not necessary, dry run possible

Characteristics of Lauramid Inject®

Material developed for injection moulding

- Lower water absorption then other polyamides
- Good dimension stability
- Good wear resistance
- High chemical resistance
- Good constructions material (temp. Of -40°C up to + 120°C)
- Good absorbability
- Good elasticity in return (memory effect)
- High creep resistance

Physical properties of various Nylons (Polyamids) in comparison

Equilibrium - moisture contents of various Nylons (Polyamids) as function of the relative air humidity at ambient temperature

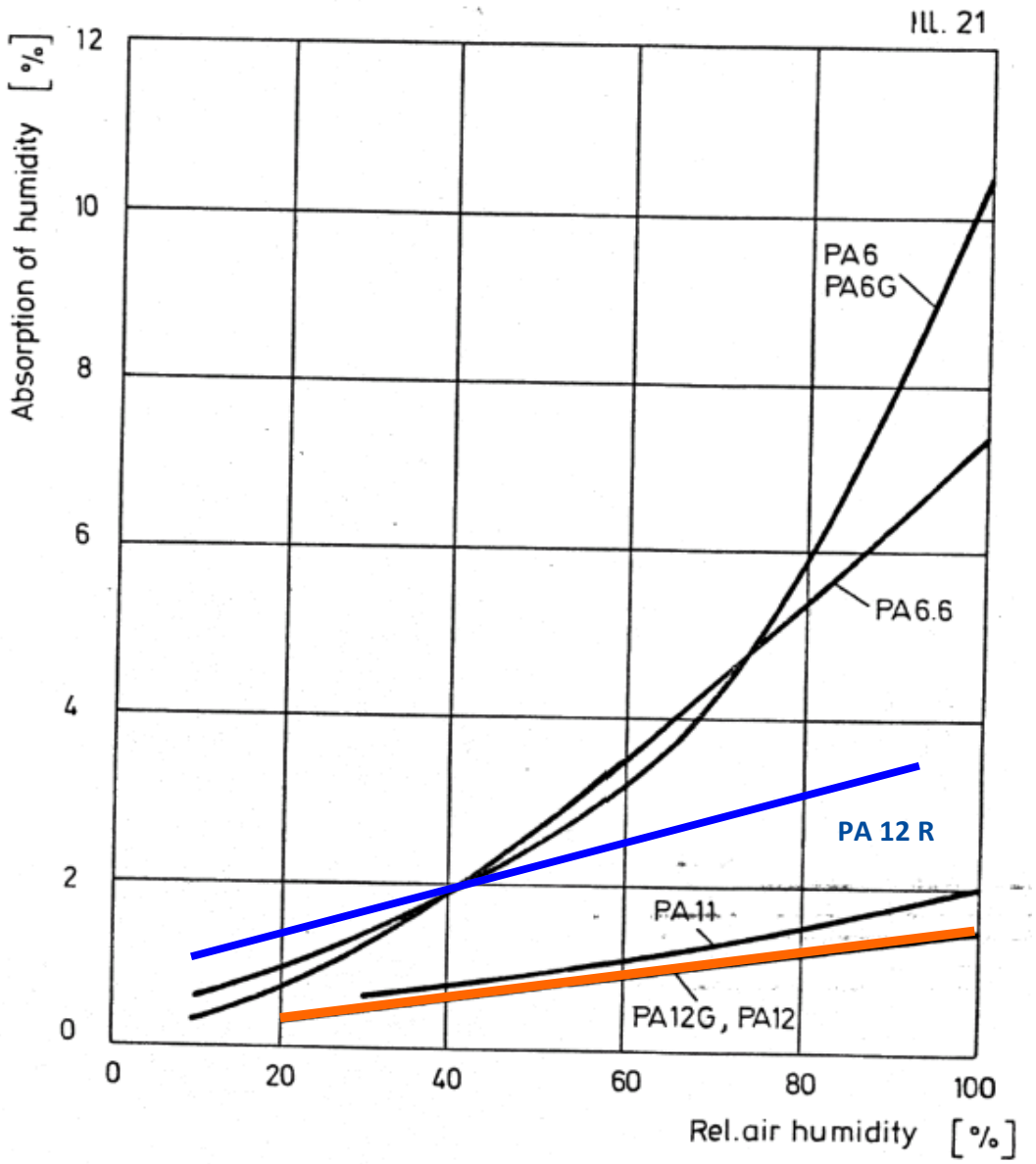

PA 12 C (Lauramid®)

PA 12 R (Lauramid Inject)

Physical properties of various Nylons Polyamids in comparison

Percentage of increase in length of various Nylons (Polyamids) dependent on the percentage of water absorption (water with ambient temperature)

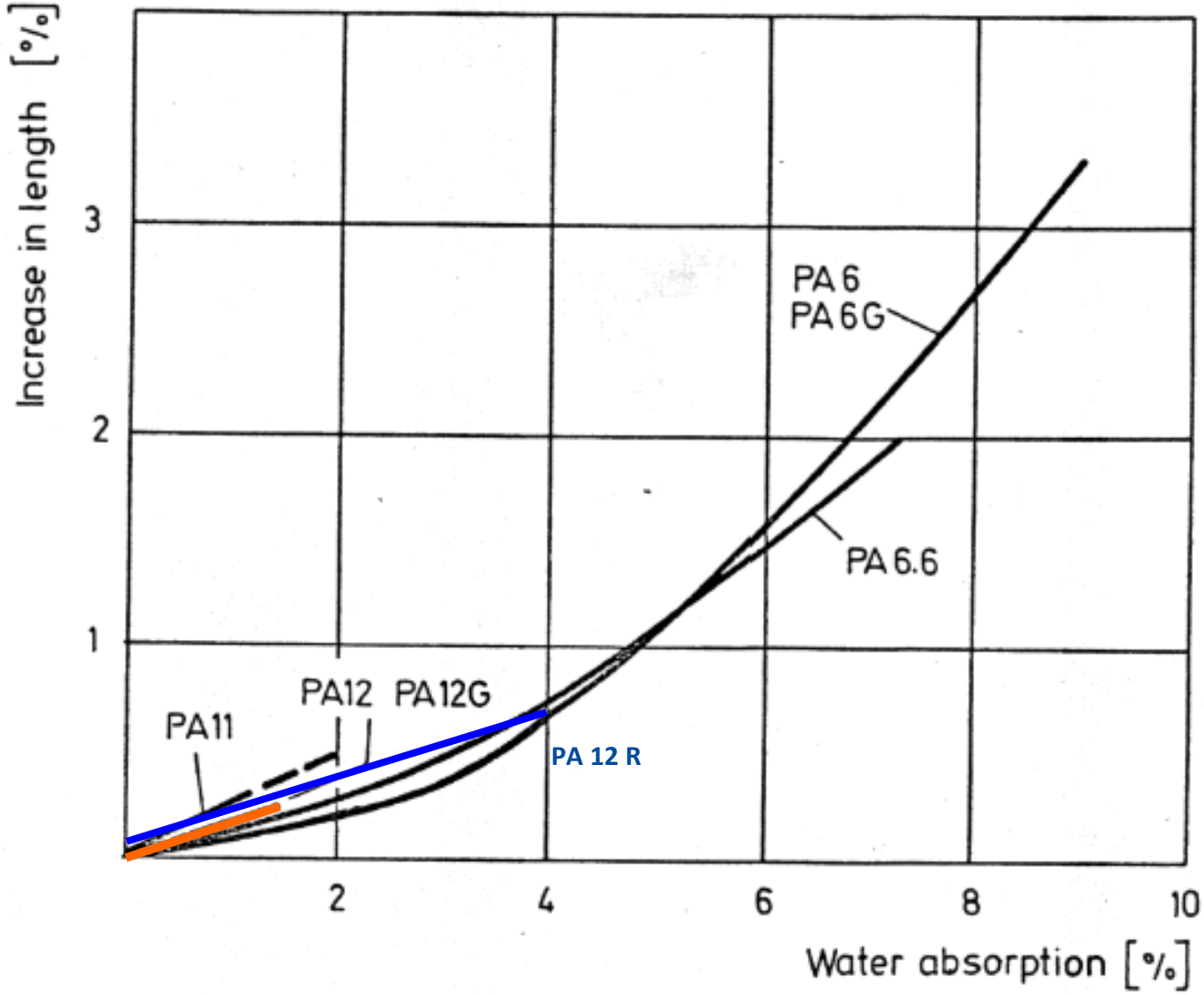

PA 12 C (Lauramid®)

PA 12 R (Lauramid Inject)

Physical properties of various Nylons (Polyamids) in comparison

Tensile strength of various Nylons (Polyamids) as function of the content of moisture at 20°C

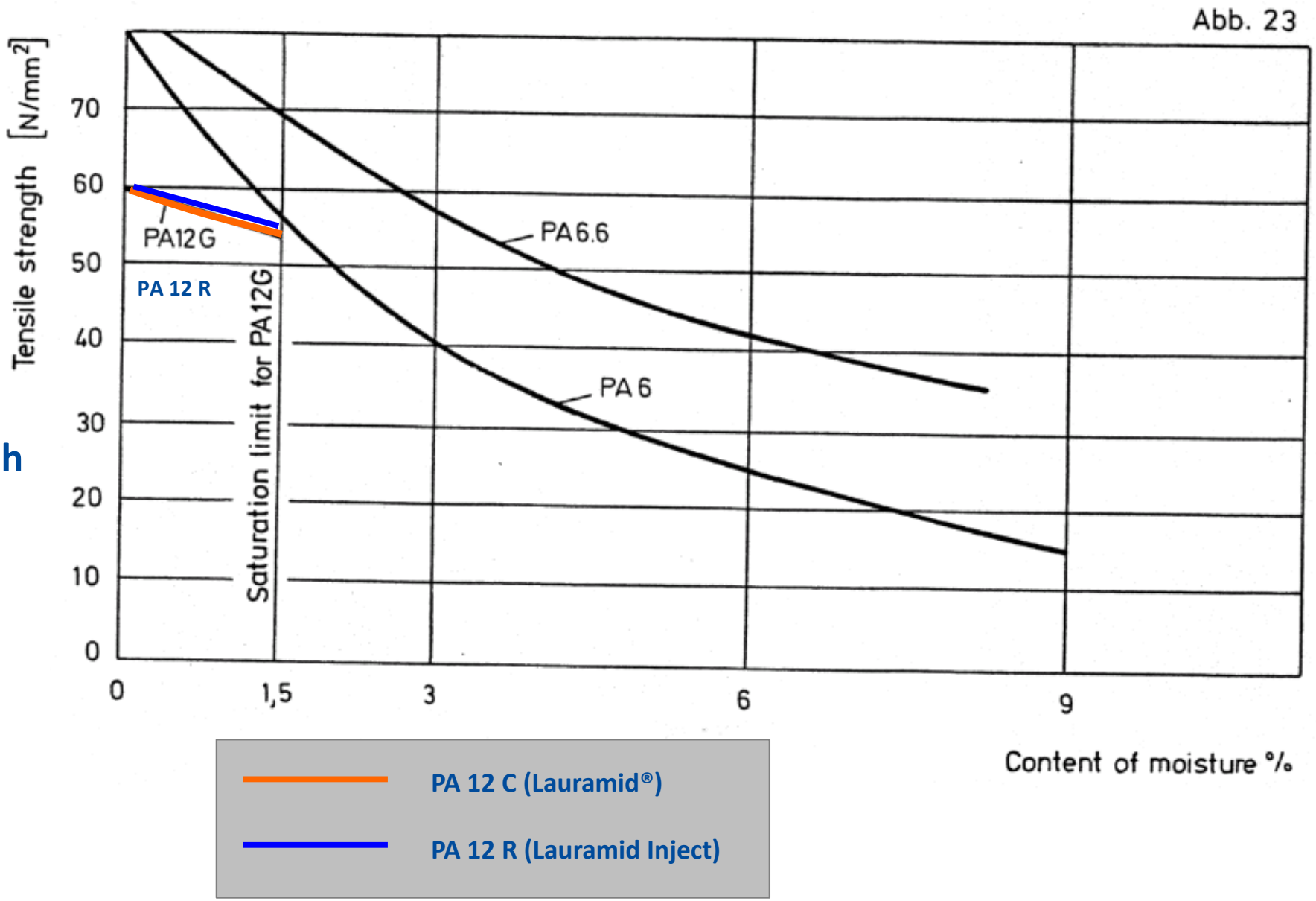

Physical properties of various Polyamides in comparison

	Einheit	PA 4.6	PA 6		Lauramid® Inject	Lauramid Type B
Density:	g/cm³	1,18	1,14		1,02	1,03
Colour:		red brown	natural		black	natural
Humidity absorption:						
Reference atmosphere:	Gew.-%	3,7	**3**		≈ 2,7	**0,9**
Water absorption:	Gew.-%	14	**9,5**		≈ 3,8	**1,4**
Melting point temperature:	°C	295	220		275	193
Thermal conductance:	W/k·m	0,3	0,23			0,25
Heat distortion temperature A:	°C	160	65			190
Upper use temperature on air:						
Short time:	°C	200	180		150	150
Continuous:	°C	**130**	90		**120**	120
Minimal use temperature:	°C	-40	-40		-30	-40
Tensile stress at yield:	MPa	**55**-100*	**45**-80*		43	60
Break stress:	MPa	-	-		47	52
Elongation at yield stress:	%	-	4		24	8
Elongation at break:	%	25-**100***	**200**-70*		>200	18
Tensile modulus:	MPa	**1300**-3300*	**1000**-3000*		1600-1700	2100
Izod notched impact strength at 23°C:	kj/m²	o.B.	5,5-**o.B.***		o.B.*	o.B.
Charpy notched impact strength at 23°C:	kj/m³	8	**35**-5*		7,7	**6**
Ball pressure hardness:	N/mm²	165	**70**-150*		154	110
Hardness Shore D:		90	**68**-82*			**76**
Coefficient of friction against steel:		0,20-0,45	0,20-0,45		0,25-0,40	0,30-,040
Volume resistivity:	Ω·cm	10^{12}-10^{14}*	10^{10}-10^{13}*			10^{14}
Surface resistivity	Ω	10^{12}-10^{13}*	10^{10}-10^{13}*			10^{14}

***1 value humid (50%)**, 2 value dry
o.B. = no break

Critical value

Designing of Rollers out of Lauramid® and Lauramid Inject®

- Examination reports institute for material handling Technical University (TU) Berlin
- VDI-research reports # 313 / 353 / 492 / 601
- Characteristic lifetime diagrams for Lauramid®-rollers with Ø = 80mm
- No characteristic lifetime diagrams for Lauramid®and Lauramid Inject®- rollers with Ø = 20 - 30mm
- 18 years experience with Lauramid® rollers for sliding doors in the automotive industry
- Execution of FE-analysis and inspect the comparison strength at -40°C / 23°C / 80°C
- Evaluation of state of stress in the Lauramid® and Lauramid Inject®- ring
- Comparison with approved rollers in the automotive industry

Impact of the maximum load on Lauramid®-Loadrollers

1. Geometry

- Outside diameter
- Convexity radius
- Width of rollers (10mm)
- Wallthickness of Lauramid®-ring

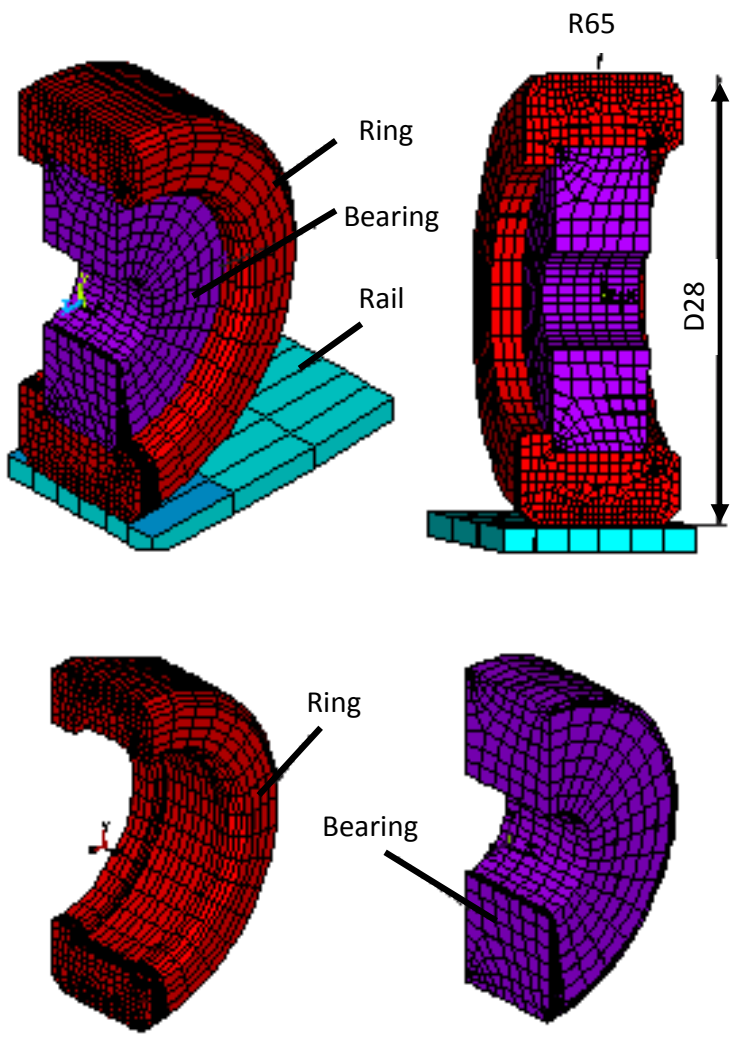

FE-model (R=65 mm)

Impact of the maximum load on Lauramid®-Loadrollers

1. Geometry

- Outside diameter
- Convexity radius

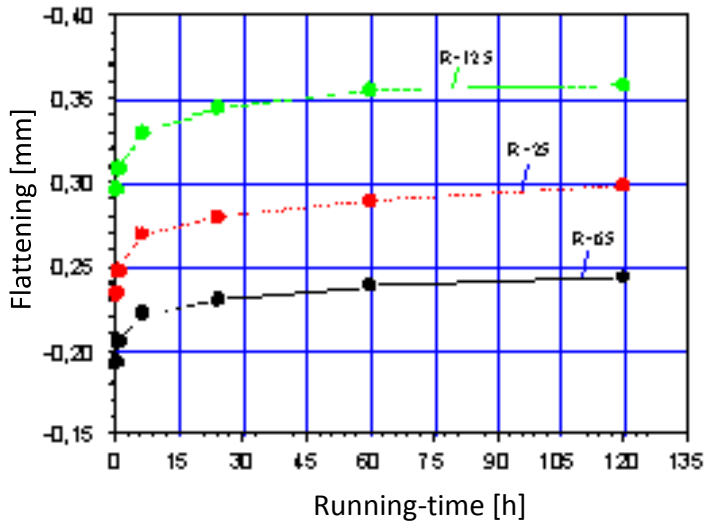

Flattening of roller D=28 mm depening on the running-time at a ambient air temperature of 80°C, load F=400N

Impact of the maximum load on Lauramid®-Loadrollers

1. Geometry

- Outside diameter
- Convexity radius
- Width of rollers (10mm)

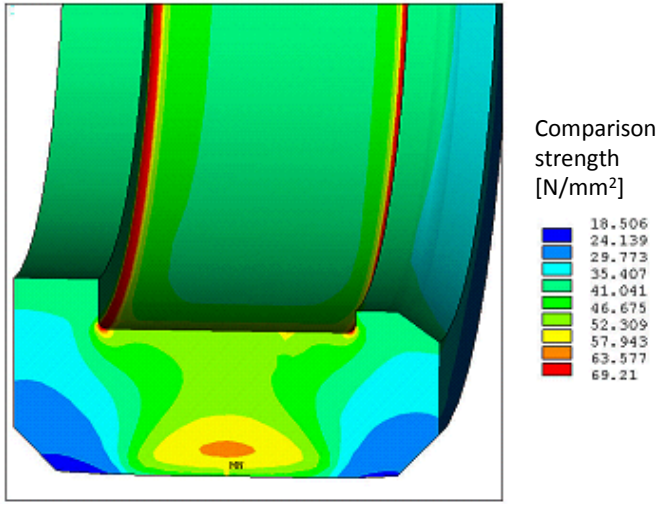

Comparison strength in the ring, D=26mm, W=10mm, F_N=350N, bearing seat width: 6 mm, press fit on the bearing seat: 0,2 mm, **T= -30°C**

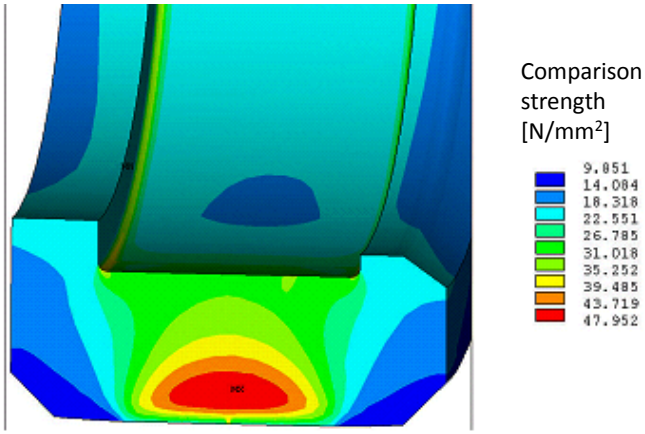

Comparison strength in the ring, D=26mm, W=10mm, F_N=350N, bearing seat width: 6 mm, press fit on the bearing seat: 0,2 mm, **T= 23°C**

Impact of the maximum load on Lauramid®-Loadrollers

1. Geometry

- Outside diameter
- Convexity radius
- Width of rollers (10mm)

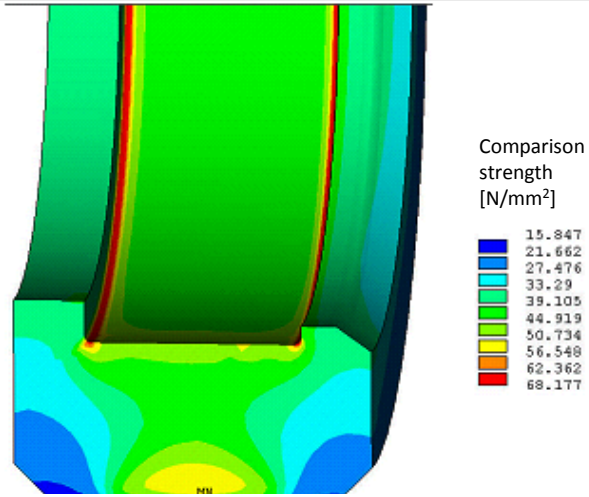

Comparison strength in the ring, D=28mm, W=10mm, F_N=350N, bearing seat width: 6 mm, press fit on the bearing seat: 0,2 mm, **T= -30°C**

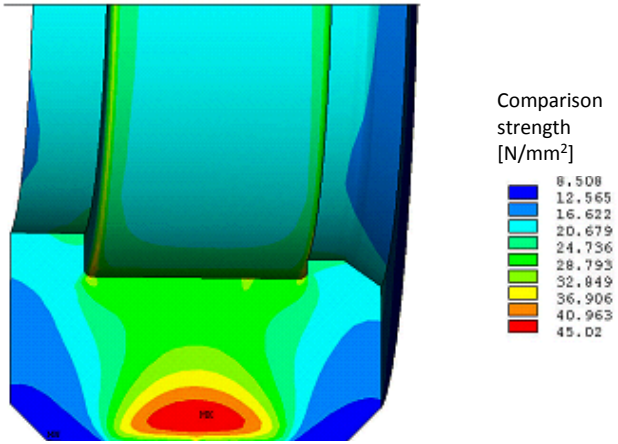

Comparison strength in the ring, D=28mm, W=10mm, F_N=350N, bearing seat width: 6 mm, press fit on the bearing seat: 0,2 mm, **T= 23°C**

Impact of the maximum load on Lauramid®-Loadrollers

1. Geometry

- Outside diameter
- Convexity radius
- Width of rollers (10mm)
- Wallthickness of Lauramid®-ring

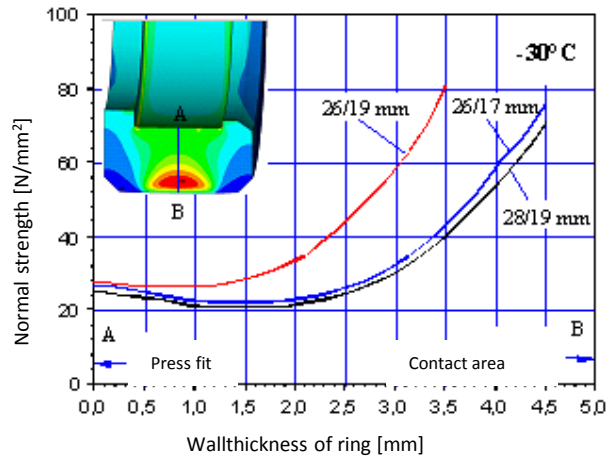

Normal strength in the ring, F_N=350N, **T-30°C**

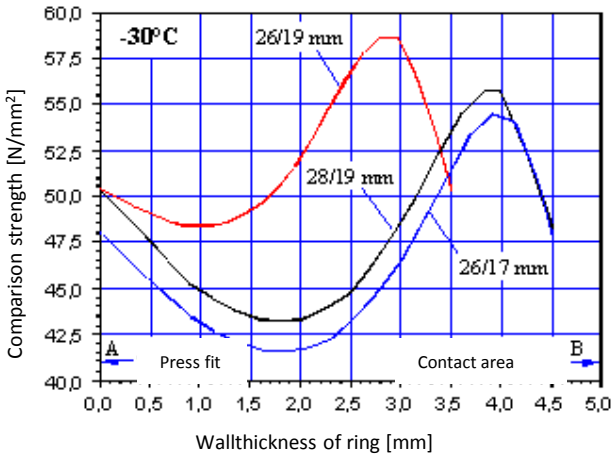

Comparison strength in the ring, F_N=350N, **T-30°C**

Load in the ring, W=10mm, F_N=350N, r=65 mm
bearing seat width: 6 mm, press fit on the bearing seat: 0,2 mm

Impact of the maximum load on Lauramid®-Loadrollers

1. Geometry

- Outside diameter
- Convexity radius
- Width of rollers (10mm)
- Wallthickness of Lauramid®-ring

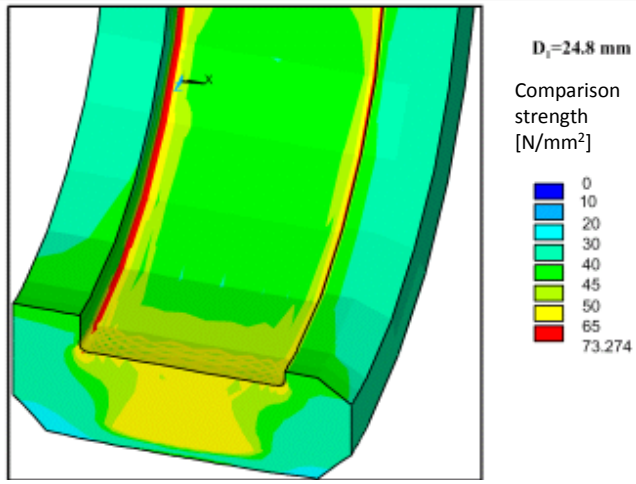

Comparison strength in the ring, D=24,8mm, W=10mm, F_N=350N, r=65 mm bearing seat width: 6 mm, press fit on the bearing seat: 0,2 mm, **T= -40°C**

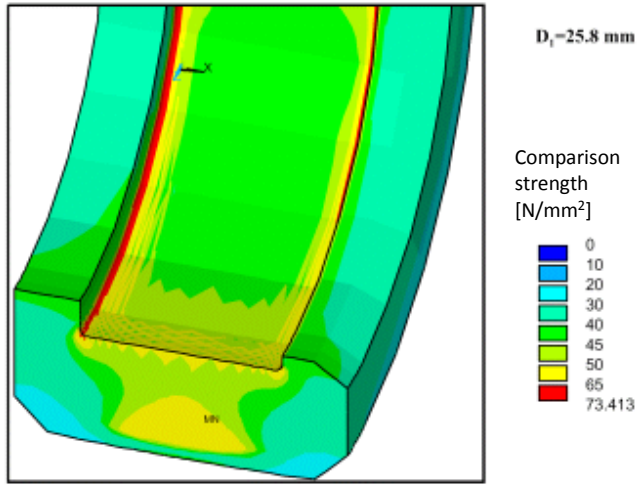

Comparison strength in the ring, D=25,8mm, W=10mm, F_N=350N, r=65 mm bearing seat width: 6 mm, press fit on the bearing seat: 0,2 mm, **T= -40°C**

Impact of the maximum load on Lauramid®-Loadrollers

1. Geometry

- Outside diameter
- Convexity radius
- Width of rollers (10mm)
- Wallthickness of Lauramid®-ring

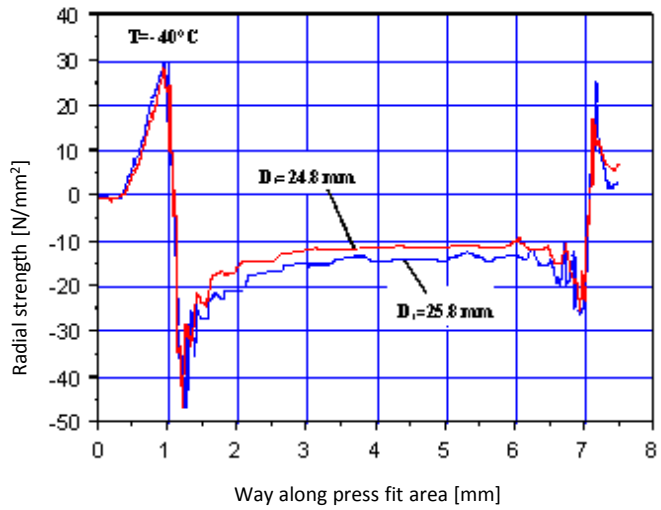

Radial strength (initial load) in the press fit area between ring and bearing, F_N=350N, **T= -40°C**

Demands on the ring at T= -40°C, W=10mm, F_N=350N, r=65 mm
bearing seat width: 6 mm, press fit on the bearing seat: 0,2 mm

Impact of the maximum load on Lauramid®-Loadrollers

2. Temperatures -40°C up to + 120°C

Requirements on the Lauramid®-ring

- <u>not</u> loose fitting at high temperatures (+80°C)

  ➡ slip effect

- <u>not</u> break at deep temperatures (-40°C)

  ➡ increasing in comparison strength at -40°C

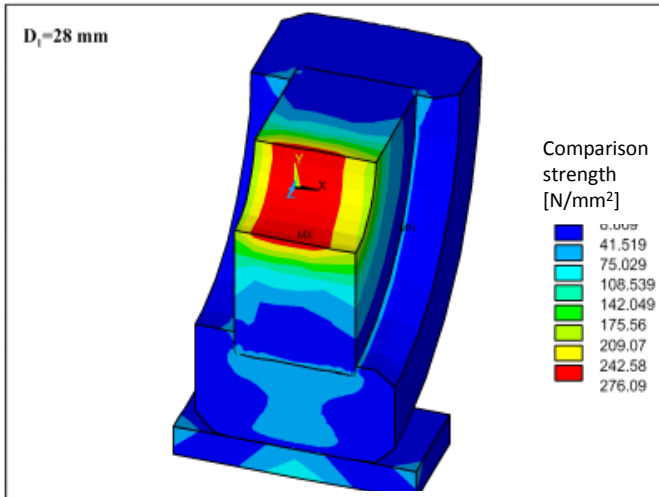

Comparison strength in the roller, W=10mm, F_N=350N, r=65 mm bearing seat width: 6 mm, press fit on the bearing seat: 0,2 mm, **T= -40°C**

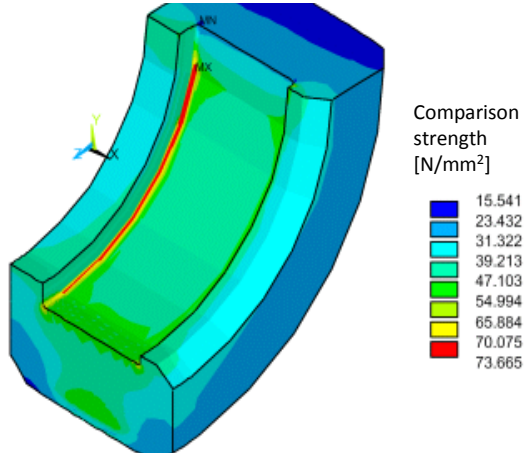

Comparison strength in the ring, W=10mm, F_N=350N, r=65 mm bearing seat width: 6 mm, press fit on the bearing seat: 0,2 mm, **T= -40°C**

Max. using force for carrier rollers out of Lauramid® and Lauramid Inject®

Lauramid®

max. normal force [N]	$Ø_{Outside}$ [mm]	Width of roller [mm]	$Ø_{Outside}$ Outer ring [mm]
250	25	10	19
300	26	10	19
350	28	10	19

Lauramid Inject®

max. normal force [N]	$Ø_{Outside}$ [mm]	Width of roller [mm]	$Ø_{Outside}$ Outer ring [mm]
200	25	10	19
250	26	10	19
300	28	10	19

Bearing: 607 2RS

Force to press out the bearing out of the Lauramid®/Lauramid Inject®-Carrierroller

- **Testing conditions**
  - Test speed [10 mm/min]
  - Temperature: 23°C

Roller 300926	Roller 301976	Roller 301534
Ø 25 x 10	Ø 23 x 10	Ø 28 x 10
min. force	min. force	min. force
2100 N	1350 N	2220 N

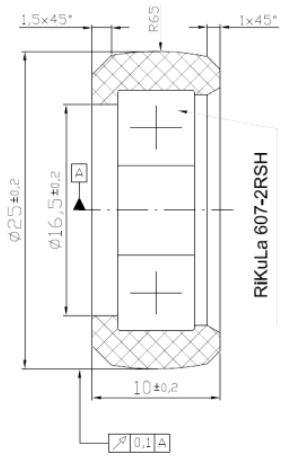

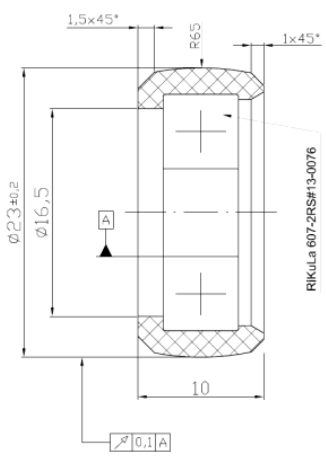

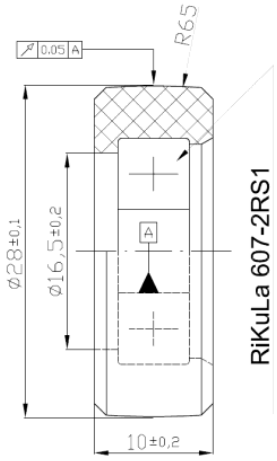

Prüfprotokoll | **Auspressprüfung**

Prüfer: Hr. Thanner
Prüfdatum: 25.11.2004
Auftrags.-Nr.: 88888-0000

Zur Kenntnisnahme: -
Dateiname: 05-10520.ZSE

Teilespezifische Daten

Produktionsdatum: -
Schicht: -
Kunde: Diverse Prüfungen
Bezeichnung: Laufrolle
Zeichnungs-Nr.: -
Teile-Nr.: 300 927/301 976/301 534
Nest: -
Werkstoff: -
Werkstoffzustand: -
Norm: -

Bemerkung

Prüfgeschwindigkeit: 10mm/min
geprüft bei Raumtemperatur

sonstige spezifische Daten

Lfd.-Nr.: 10520
Serien-Nr.: -
Teil/Station/Probe: 15
Bereich/Probe: 1
Charge: -
Vergütecharge: -
Parameter: -
Laser: -
Tisch-Nr.: -

Zusatzdaten für Muster

Indexdatum: -
Index: -
Prüfberichts-Nr.: -

Diagramm

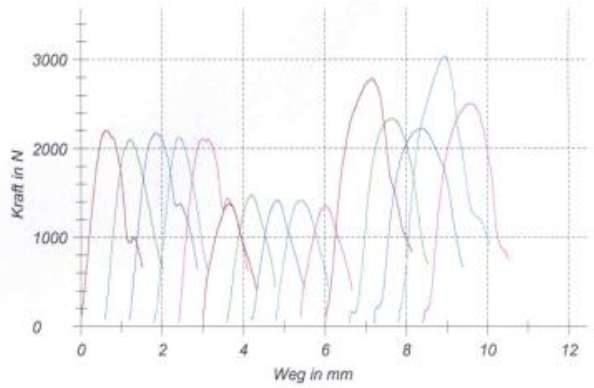

Prüfergebnisse — **Probentyp : -**

Legende	Probe-Nr.	Kraft N	Bemerkung / visuelle Beurteilung der Bruchfläche
	10520	2203	Probe 1 - 300 926
	10521	2099	Probe 2 - 300 926
	10522	2170	Probe 3 - 300 926
	10523	2121	Probe 4 - 300 926
	10524	2105	Probe 5 - 300 926
	10525	1376	Probe 1 - 301 976
	10526	1473	Probe 2 - 301 976
	10527	1416	Probe 3 - 301 976
	10528	1417	Probe 4 - 301 976
	10529	1348	Probe 5 - 301 976
	10530	2785	Probe 1 - 301 534
	10531	2335	Probe 2 - 301 534
	10532	2222	Probe 3 - 301 534
	10533	3037	Probe 4 - 301 534
	10534	2507	Probe 5 - 301 534

Force to press out the bearing out of the Lauramid®/Lauramid Inject®-Carrierroller

- **Testing conditions**
  - Test speed [10 mm/min]
  - Temperature: 80°C

Roller 300926	Roller 301976	Roller 301534
Ø 25 x 10	Ø 23 x 10	Ø 28 x 10
min. force	min. force	min. force
1040 N	600 N	1085 N

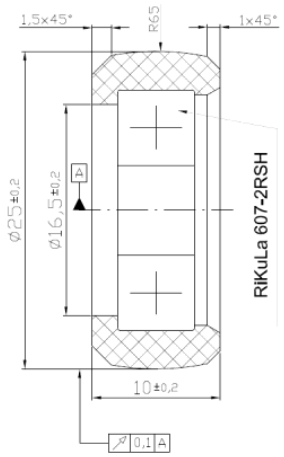

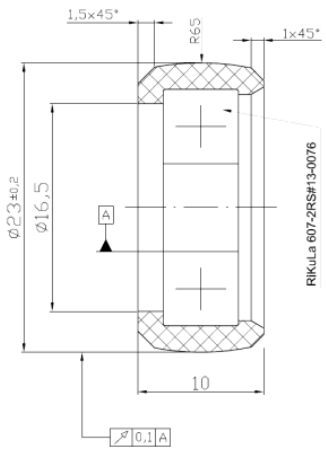

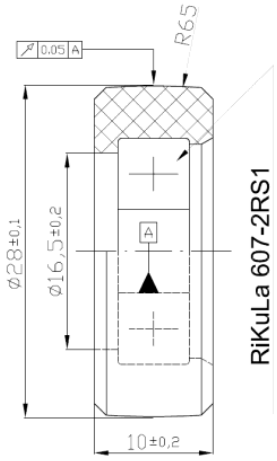

Prüfprotokoll | **Auspressprüfung**

Prüfer: Hr. Thanner
Prüfdatum: 25.11.2004
Auftrags.-Nr.: 88888-0000

Zur Kenntnisnahme: -
Dateiname: 05-10500.ZSE

Teilespezifische Daten

Produktionsdatum: -
Schicht: -
Kunde: Diverse Prüfungen
Bezeichnung: Laufrolle
Zeichnungs-Nr.: -
Teile-Nr.: 300 927/301 976/301 534
Nest: -
Werkstoff: -
Werkstoffzustand: -
Norm: -

Bemerkung

Prüfgeschwindigkeit: 10mm/min
geprüft bei ca. 80°C

sonstige spezifische Daten

Lfd.-Nr.: 10500
Serien-Nr.: -
Teil/Station/Probe: 15
Bereich/Probe: 1
Charge: -
Vergütecharge: -
Parameter: -
Laser: -
Tisch-Nr.: -

Zusatzdaten für Muster

Indexdatum: -
Index: -
Prüfberichts-Nr.: -

Diagramm

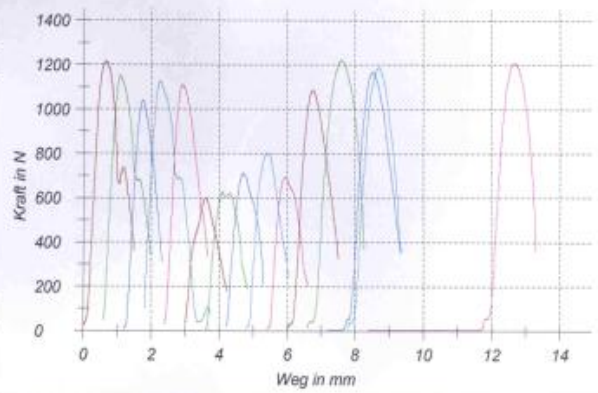

Prüfergebnisse — Probentyp : -

Legende	Probe-Nr.	Kraft N	Bemerkung / visuelle Beurteilung der Bruchfläche
	10500	1216	Probe 1 - 300 926
	10501	1152	Probe 2 - 300 926
	10502	1041	Probe 3 - 300 926
	10503	1126	Probe 4 - 300 926
	10504	1110	Probe 5 - 300 926
	10505	601	Probe 1 - 301 976
	10506	625	Probe 2 - 301 976
	10507	711	Probe 3 - 301 976
	10508	800	Probe 4 - 301 976
	10509	690	Probe 5 - 301 976
	10510	1086	Probe 1 - 301 534
	10511	1220	Probe 2 - 301 534
	10512	1166	Probe 3 - 301 534
	10513	1187	Probe 4 - 301 534
	10514	1209	Probe 5 - 301 534

Advantage of guiding rollers out of Lauramid® and Lauramid Inject®

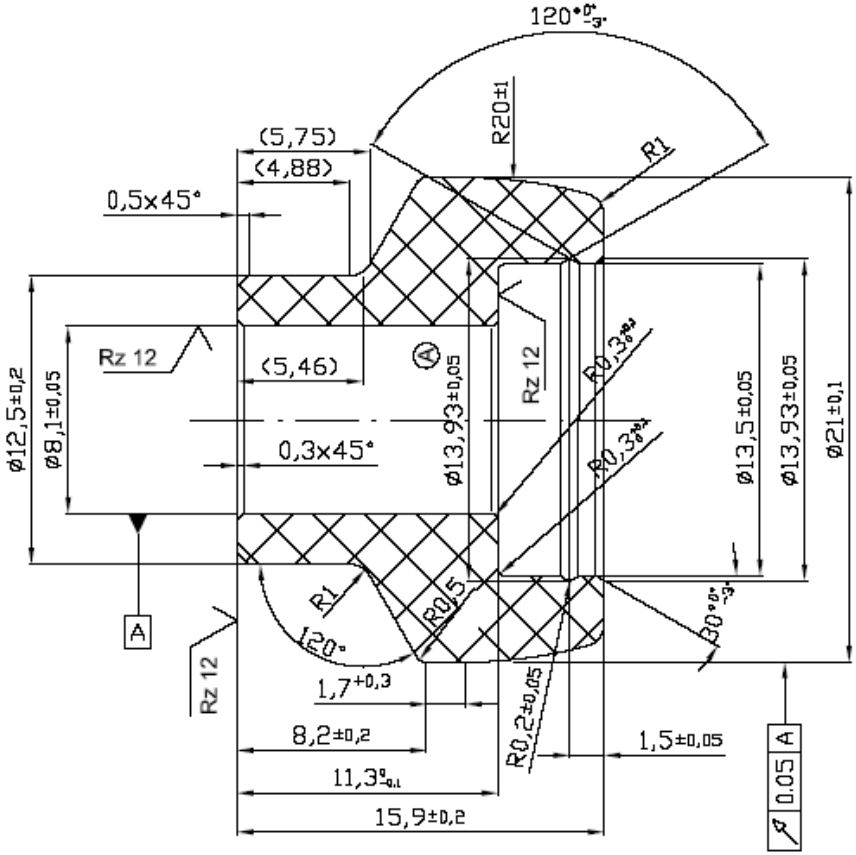

- Absorbing of shrinking and vibration
- Rugged in dimensions
- Wear resistant
- Long lifetime (will achieve the car-lifetime)
- Pretty good true running
- Pretty robust against flattening under vertical load (especially guiding rollers) ==> reducing loudness